Position - Laser

Non contact measurement

Description

Non-contact distance measurement using diffused reflection to create an analogue output.

Principal based on triangulation. 2 built in LED's allow diagnostics and operating mode.

Dimensions

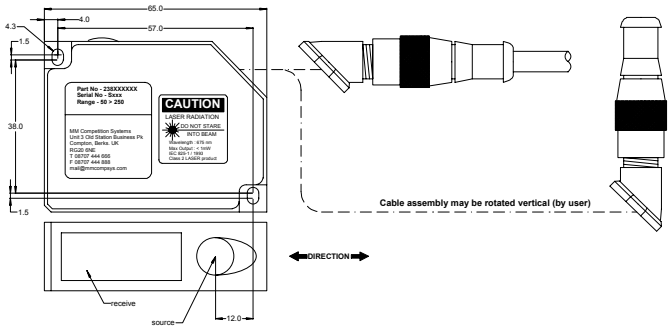

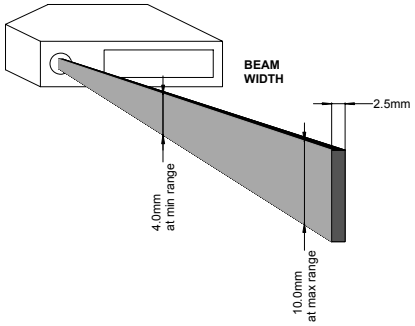

Technical Data

Performance

Linearity ..... < +/- 0.5 mm
Response time ..... <10 ms
Resolution ..... 0.5 mm
Laser beam figure ..... bar
Laser beam height ..... 5.5 ... 16.5 mm
Laser beam width ..... 1 mm
Operation indicator ..... LED green
Alarm indicator ..... LED red
Light source ..... Laser diode, red, pulsed
Wavelength ..... 675 mm

Electrical

Supply voltage ..... 12.7 > 28 Vdc
Max supply current ..... < 60 mA
Output voltage ..... 0>5v Dc
Output at minimum range ..... 0 Vdc **
Output at maximum range ..... 5 Vdc **
** Sensors supplied with calibration data

Environmental

Operation temperature (sensor) ..... 0 > 50 °c
Housing material ..... Cast – Zink
Weight inc cable ..... 190 g
Cable ..... 3 x 0.14mm/sq PVC
..... 300mm
Connector ..... AS6 08 98 PN Fixed

Electrical connections

Wire colour	Brown	Grey	Blue
Function	+12v	Signal	Ground
AS6 08 98 PN	1	2	3

Ordering information

Part No.	Cable length	Connector	Description	Order Code
CS193	300mm	AS6 08 98 PN HE	Laser non contact ride height sensor – 100 > 300mm range	23810510402
CS194	300mm	AS6 08 98 PN HE	Laser non contact ride height sensor – 100 > 500mm range	23810510502
CS195	300mm	AS6 08 98 PN HE	Laser non contact ride height sensor – 50 > 250mm range	23810510602

For further details please contact

Competition Systems Ltd
Hyjuniper, Long Lane
Shaw, Berkshire,
RG14 2TA
England

Tel: +44 (0)8707 444666
Fax: +44 (0)8707 444888

mail@competitionsystems.co.uk